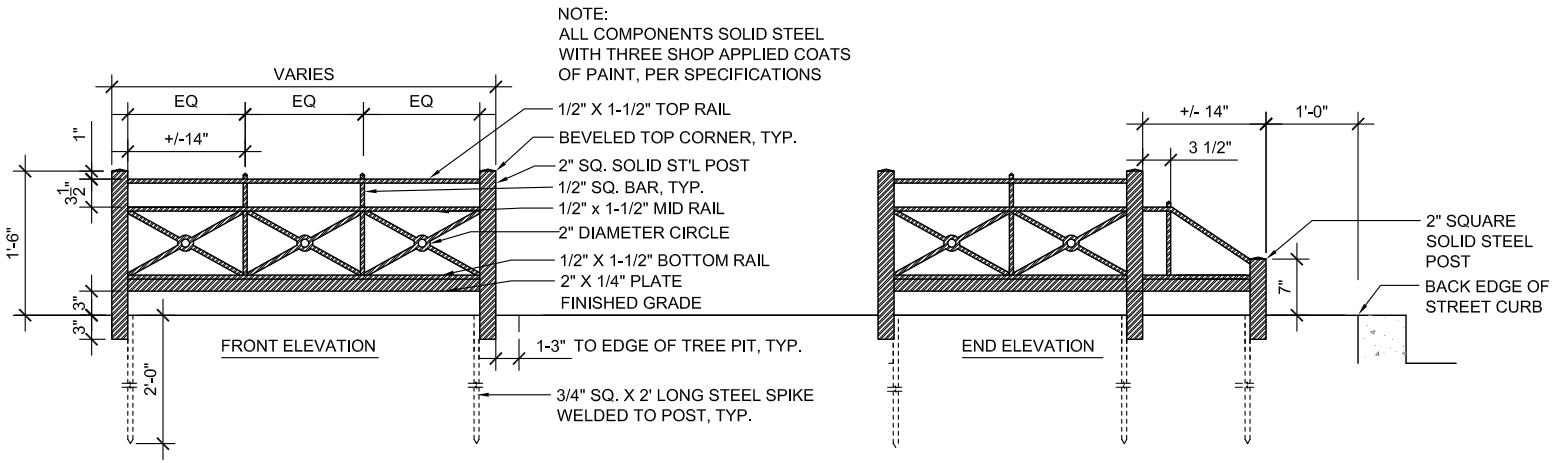

TREE PIT GUARD TYPE 'C'

NOT TO SCALE

TYPE 'C' THREE-SIDED DESIGN

NOT TO SCALE